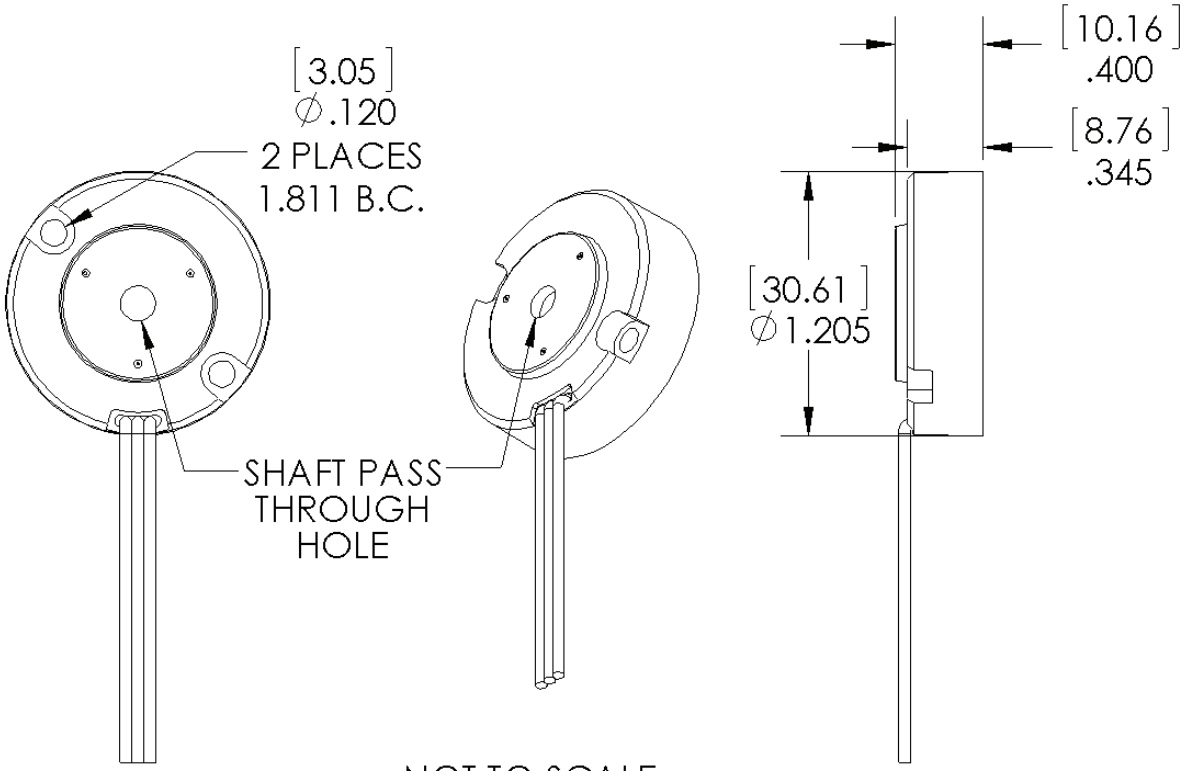

NOT TO SCALE

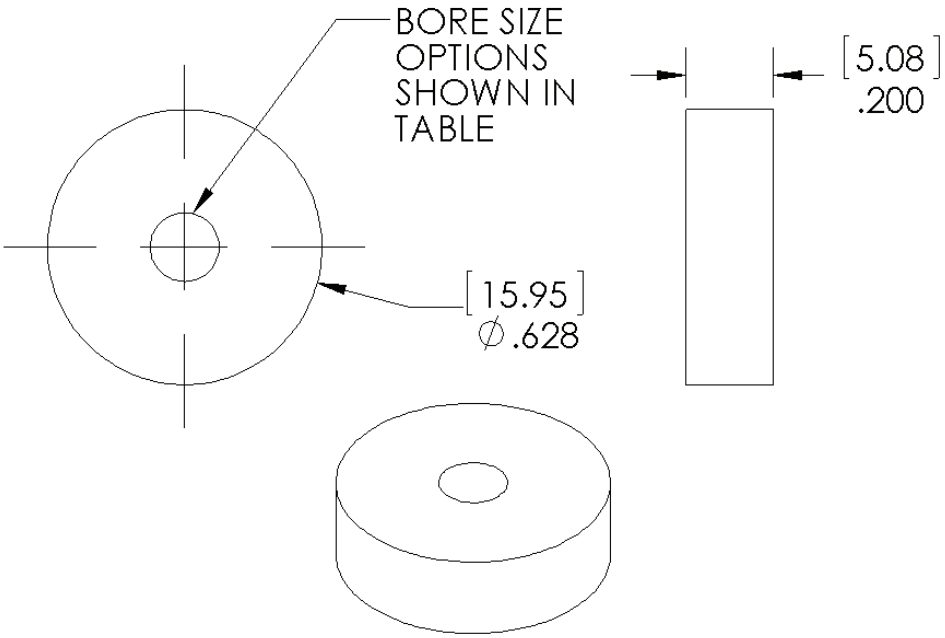

NOT TO SCALE