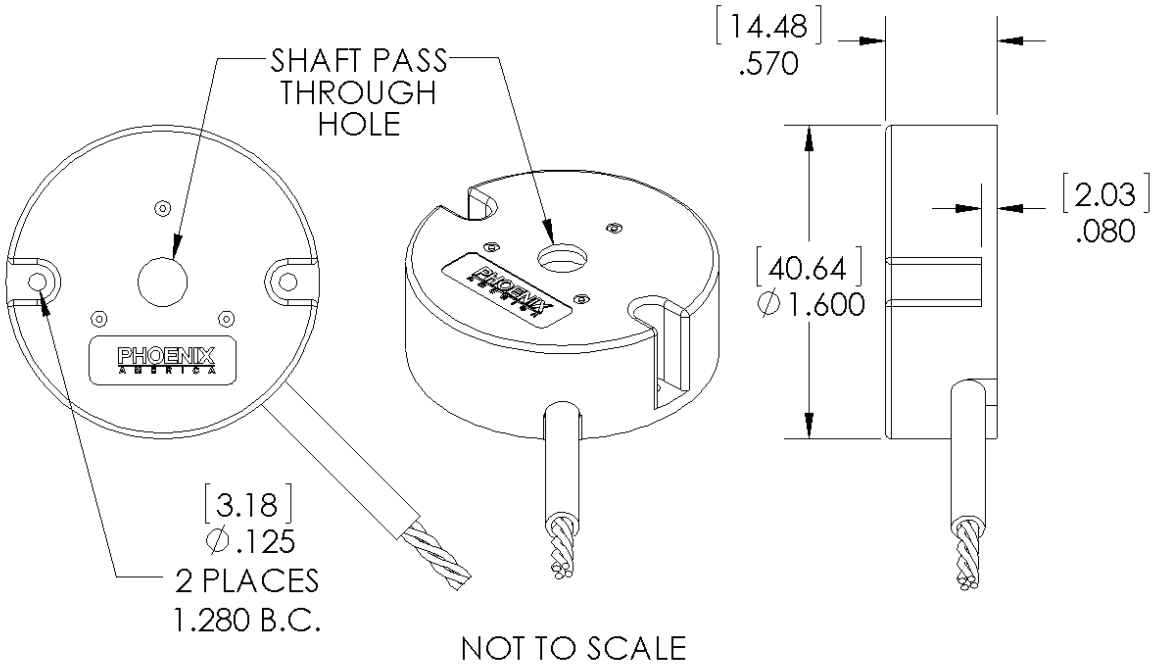
SHAFT PASS
THROUGH
HOLE
[14.48]
.570
[2.03]
.080
[40.64]
∅1.600
PHOENIX
AMERICA
[3.18]
∅.125
2 PLACES
1.280 B.C.
NOT TO SCALE

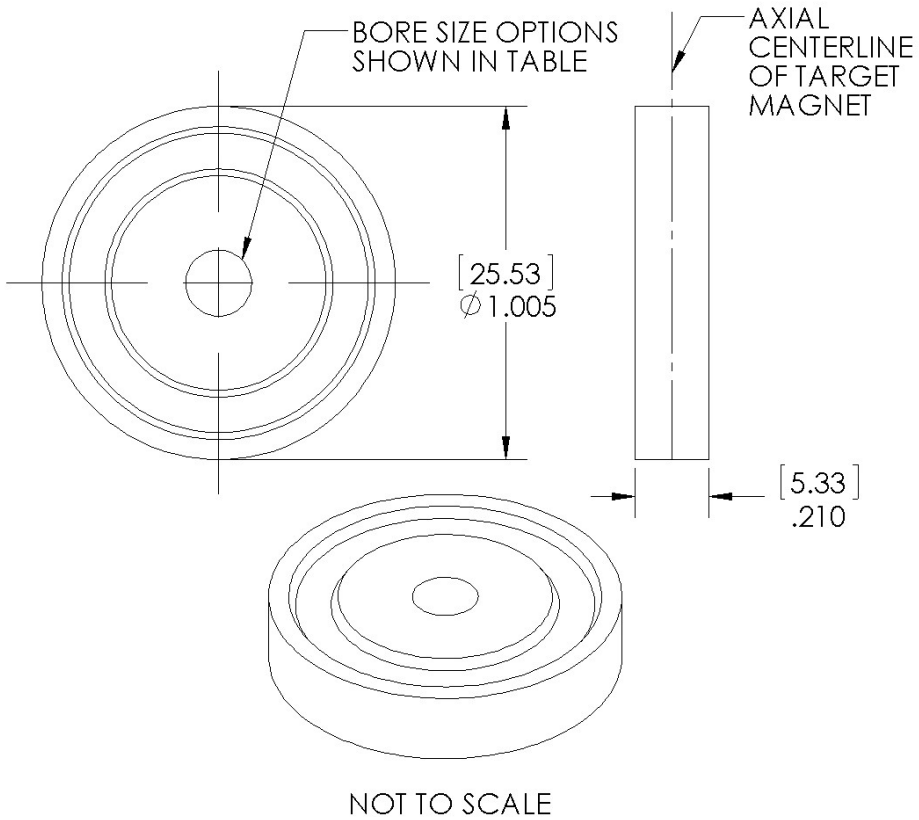
BORE SIZE OPTIONS
SHOWN IN TABLE
AXIAL
CENTERLINE
OF TARGET
MAGNET
[25.53]
∅1.005
[5.33]
.210
NOT TO SCALE

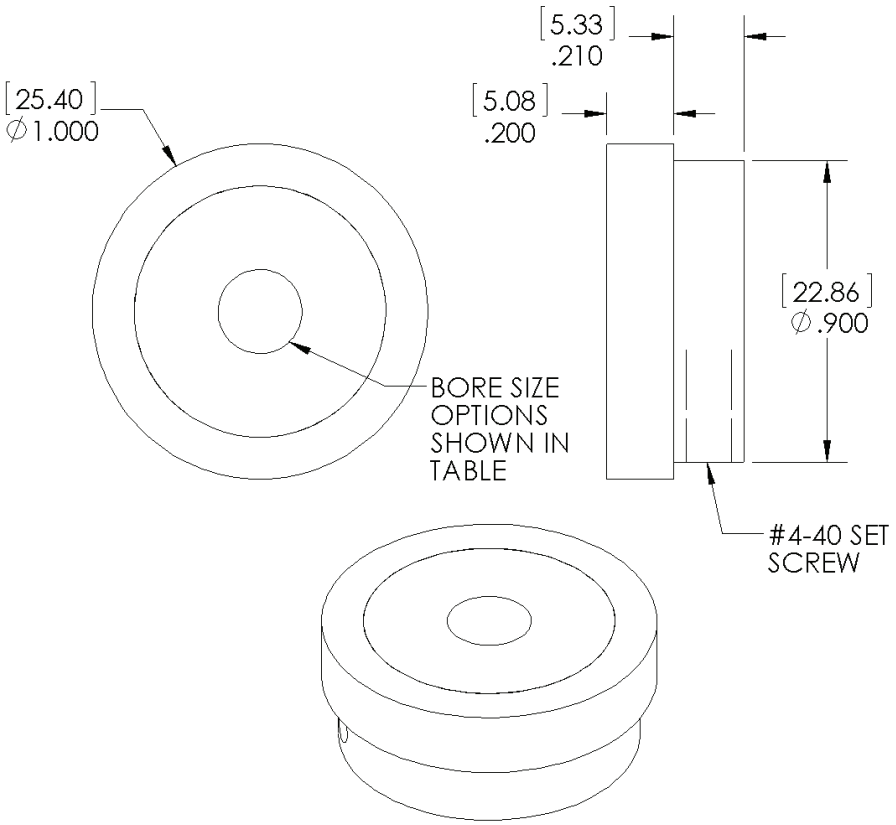

NOT TO SCALE

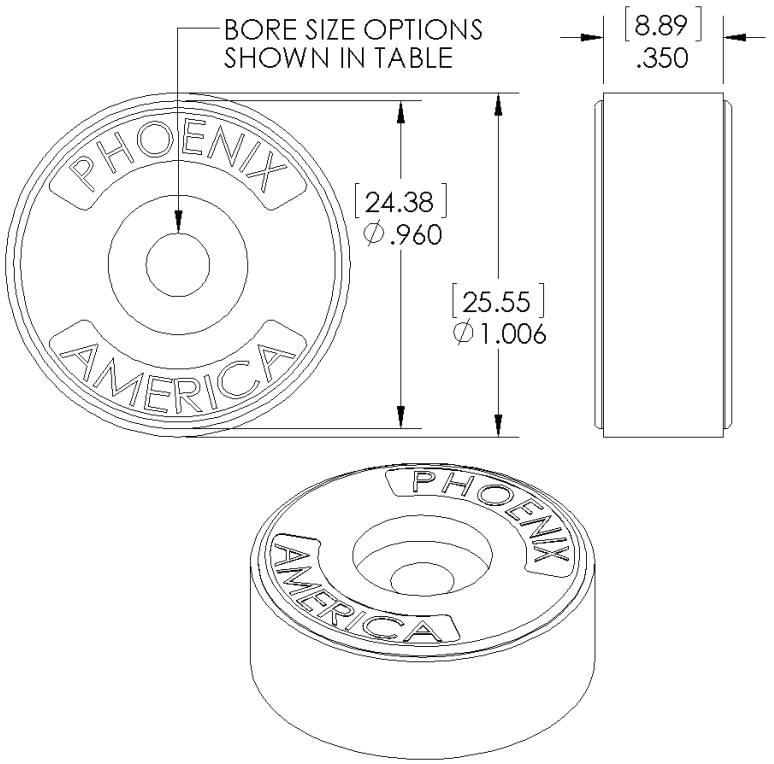

NOT TO SCALE